This master schematic shows all possible parts.
Installing all parts would result in much damage.

3 variations with different populations are used.
Use the appropriate schematic and parts list for each variation.

1 U4 & R11 NOT to be fitted for LDMOS PA otherwise 24V will be applied to the gate of the LDMOS FET resulting in instant destruction

2 Active bias circuit fitted only for LDMOS FET NOT for Pyro Joe PA

SHACK = Shack display, no PA
LDMOS = LDMOS PA Shack or Mast
PyroJoe = PYROJOE PA Shack or Mast

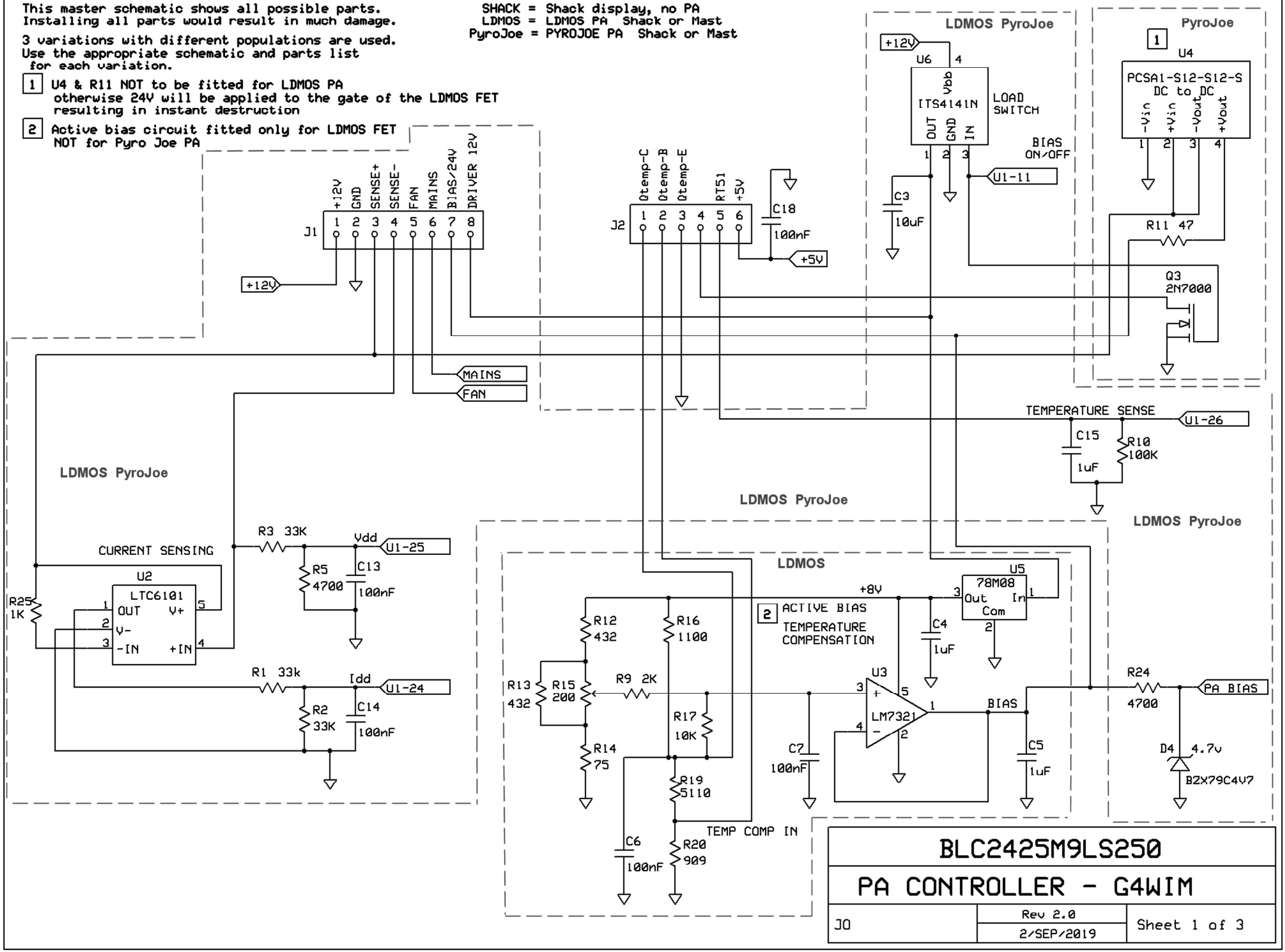

BLC2425M9LS250

PA CONTROLLER - G4WIM

JO	Rev 2.0 2/SEP/2019	Sheet 1 of 3