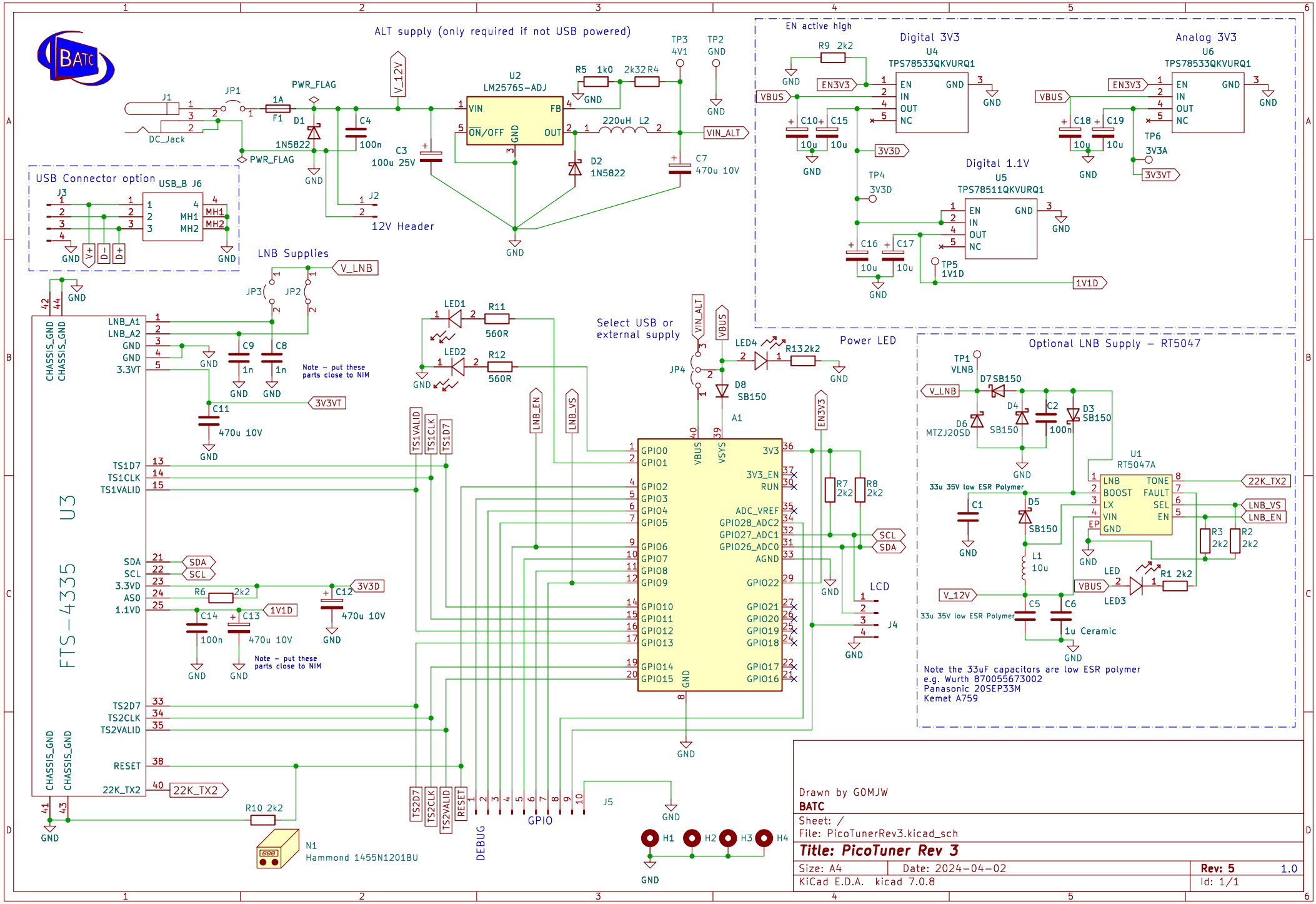
ALT supply (only required if not USB powered)
J1
DC_Jack
JP1
1A
F1
PWR_FLAG
D1
1N5822
C4
100n
V_12V
U2
LM2576S-ADJ
VIN
FB
ON/OFF
GND
OUT
R5 1k0
2k32 R4
TP3
4V1
TP2
GND
220uH L2
VIN_ALT
C3
100u 25V
D2
1N5822
C7
470u 10V
J2
12V Header
USB Connector option
J3
USB_B J6
MH1
MH2
V+
D-
D+
LNB Supplies
V_LNB
JP3
JP2
LED1
R11
560R
LED2
R12
560R
Select USB or
external supply
JP4
VBUS
LED4
R13 2k2
Power LED
D8
SB150
EN active high
Digital 3V3
U4
TPS78533QKVURQ1
R9 2k2
EN3V3
EN
IN
OUT
NC
C10
C15
10u
3V3D
TP4
3V3D
Digital 1.1V
U5
TPS78511QKVURQ1
C16
C17
TP5
1V1D
1V1D
Analog 3V3
U6
TPS78533QKVURQ1
C18
C19
TP6
3V3A
3V3VT
Optional LNB Supply – RT5047
TP1
VLNB
D7 SB150
D6
MTZJ20SD
D4
SB150
C2
100n
D3
SB150
U1
RT5047A
LNB
BOOST
LX
VIN
GND
TONE
FAULT
SEL
EN
EP
22K_TX2
LNB_VS
LNB_EN
33u 35V low ESR Polymer
C1
D5
SB150
L1
10u
R3 2k2
R2 2k2
LED
LED3
R1 2k2
V_12V
C5
C6
1u Ceramic
Note the 33uF capacitors are low ESR polymer
e.g. Wurth 870055673002
Panasonic 20SEP33M
Kemet A759
FTS-4335 U3
CHASSIS_GND
LNB_A1
LNB_A2
3.3VT
Note – put these parts close to NIM
C9
C8
1n
C11
470u 10V
TS1D7
TS1CLK
TS1VALID
SDA
SCL
3.3VD
AS0
1.1VD
R6 2k2
C12
470u 10V
C14
100n
C13
470u 10V
TS2D7
TS2CLK
TS2VALID
RESET
22K_TX2
R10 2k2
N1
Hammond 1455N1201BU
GPIO0
GPIO1
GPIO2
GPIO3
GPIO4
GPIO5
GPIO6
GPIO7
GPIO8
GPIO9
GPIO10
GPIO11
GPIO12
GPIO13
GPIO14
GPIO15
3V3
3V3_EN
RUN
ADC_VREF
GPIO28_ADC2
GPIO27_ADC1
GPIO26_ADC0
AGND
GPIO22
GPIO21
GPIO20
GPIO19
GPIO18
GPIO17
GPIO16
R7 2k2
R8 2k2
LCD
J4
J5
DEBUG
GPIO
H1
H2
H3
H4
Drawn by G0MJW
BATC
Sheet: /
File: PicoTunerRev3.kicad_sch
Title: PicoTuner Rev 3
Size: A4
Date: 2024-04-02
Rev: 5
1.0
KiCad E.D.A. kicad 7.0.8
Id: 1/1